ISSN 2395-1621

Industrial Parameters Measurement Using Data Acquisition System

#1Sushmita S. Mutgekar, #2Shital D. Markad, #3Mohini Sangvikar

1msushmita19@gmail.com,
2shitalmarkad1@gmail.com,
3mohininila@gmail.com

#123Department of Electronics & Telecommunication

NBN Sinhgad School of Engineering, Pune.

ABSTRACT

In many real life applications such parameters need to be constantly measured and monitored so that the data is available for control of heterogeneous parameters and in the automation of different processes. As technology is progressing, the advances in hardware as well as in software have resulted in the use of PC in different precise and control measurement applications. In this paper, we are measuring strain along with other parameters such as load and pressure all together in a single system. The data is also stored, so that it can be retrieved for future references. These parameters play an important role in performance, reliability and life of machines as well as their safety.

ARTICLE INFO

Article History

Received: 29th March 2017

Received in revised form : 29th March 2017

Accepted: 1st April 2017

Published online : 17th April 2017

Keywords-Wheatstone bridge, microcontroller, data acquisition board, PC interface.

I. INTRODUCTION

The Data Acquisition Systems are used for the measurement and analysis of a certain process. The proper functioning of a system is depends on certain occurrence of events in time and its parameters. Such measurable quantities cannot be actually sensed or perceived. Hence sensors and transducers convert them into electronic signals or vice versa according to the requirement. With increasing technology, need for storing and keeping a record of the data was felt for the purpose of development and future references. The PC based data acquisition systems record a reliable, accurate and error free data, provided they are operated according to the recommendations of the manufacturer, considering the environmental conditions change and selection of appropriate sensors.

The data acquisition and processing acquires multiple different signals and processes them in real time. The parameter- stress in a material cannot be measured directly. Hence, in the analysis of stress, the strain of the material measured and other properties of the material is combined so as to calculate the stress for a given load. It is very important to know the behavior of used materials, their stress as well as strain and their influence on a design [1].

In real application, the strain gauge resistance changes because of deformation of the surface to which the sensor is attached and the influence of other parameters, like temperature or material properties.

The strain and resistance varies linearly and the constant of proportionality is known as the "sensitivity factor", which is given by,[2]

$$G= (\Delta R/R)/\varepsilon$$

Where, G- sensitivity factor
ΔR- change in resistance
R- initial resistance
ε- ratio of change in length to initial length

II. LITERATURE REVIEW

Alexander Reyes and Fransisco J. Valero, "Inexpensive, wearable, wireless, multi-channel and multi-sensor data acquisition system", have worked on a strain gauge based single axis load cell which is capable of measuring 10lbs force. It uses Wheatstone bridge configuration to measure changes in resistance and produces output proportional to the applied forces. This wireless system presented is configurable, robust, low cost and easy to use, yet many modifications and updates have been carried out.[3]

N. Mabunda and Meera K. Joseph "The use of embedded DAS for electronic signal measurement", have worked on The

Data Acquisition Systems (DAS) which are basically used with transducers to collect information about change in velocity, temperature, strain etc. This information is sampled and digitized by the DAS before giving it to the processor where it is analyzed. It finds applications in mobile satellites to acquire the control signals and also in automation of processes. It demonstrated that flexibility of embedded DAS allows addition of functions which may not be available in the traditional devices.[4]

Patel Hiren, Patel Deepak, "GUI based data acquisition system using ARM Coretx M3 microcontroller", have analyzed that the embedded system performance is optimized if the system is built using ARM processor. This system is not developed for any particular sensor and any data can be gathered and analyzed, provided that proper signal conditioning is connected to the data acquisition card.[5]

A general purpose data acquiring system was designed which could read any analog sensor, giving output in the desired range through proper signal conditioning. It is designed such that it can handle the system without the need of any additional PC. This system is designed using Raspberry Pi which performs data acquisition, online plotting and data logging simultaneously.[6]

III. SYSTEM DEVELOPMENT

There are certain approaches already existing for acquisition and processing of various data. But every system has its own advantages and limitations. The different system approaches are-

1. Raspberry Pi

Raspberry Pi if used provides many connectivity options along with low cost, thus establishing a good performance, but compromising the development time. The difficulties were faced in achieving the required sample rate and hence more advancements must be made to the hardware.

2. Data Acquisition using ADC

Data Acquisition can be carried out using a high speed ADC. The minimum ratio of the bandwidth and sampling frequency should be at least 0.35. Jitter in the clock plays an important role here. As large number of signals to be read increases, interference and jitter in the clock increases. To overcome this, correlation is obtained by time stamping each acquired signal to the required resolution.

3. ARM based System on Chip(SOC)

By using low cost system on chip with ARM data acquisition and processing is possible. It provides high functionality, performance and simplification in software development application. The system power required is less, board size is reduced and the cost is also less. The data rate is high as compared to the other processors. It provides the interfacing programming into a single chip ARM processor.
Due to the above mentioned advantages of ARM Cortex based system, we would be dealing with this methodology.

IV. SYSTEM ARCHITECTURE

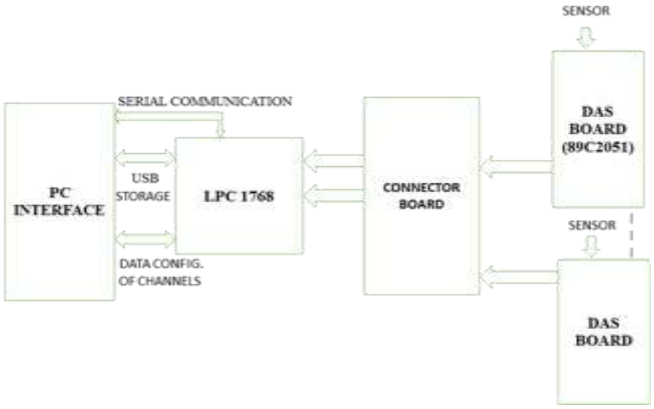

Fig.1.Block diagram of DAS

1. Data Acquisition Board

The main part of the Data Acquisition System is the Data Acquisition Board. This board is designed specially to carry out important functions of accepting the input and converting it into an electrical signal in the form of current or voltage and processing them.
The number of input parameters that can be measured depends on the number of channels provided to the board. If more measurement of parameters is required, we may increase the number of channels. Here we are using 4-channels per data acquisition board.
The AT89C51 requires low power and high performance microcomputer which does all the processing of the received data. This processed data is then given for further processing to the ARM Cortex microcontroller.

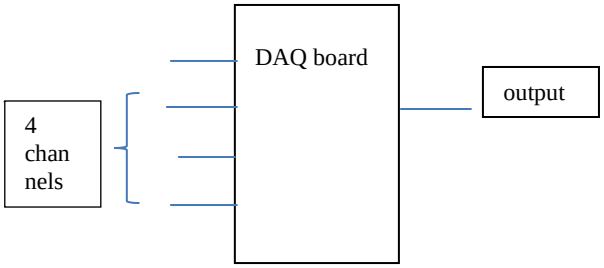

Fig.2. An overview of DAQ board

2. Strain Gauge Sensors

The external force which is sensed on an object deforms the strain gauge. The strain gauge measures the deformation as a change in electrical resistance, which is a measure of the strain i.e. the applied forces. When four strain gages are connected in a Wheatstone bridge, we get a full bridge configuration. Load cell is said to have full bridge configuration. Similarly, on connecting a single strain gauge in one of the arms of the bridge is referred to as Quarter Bridge whereas the use of two strain gauges in Wheatstone is referred as half bridge configuration.
The pressure sensor consists of the same arrangement of resistances in a Wheatstone bridge configuration. Therefore, we can attach and select any of the sensor and measure the desired parameter with the desired configuration.

The design is made such that, with the help of software configuration we can measure strain on any of the arm of the Wheatstone bridge. This gives us flexibility and there is no need for separate boards for measuring different parameters and configurations.

3. LPC 1768

To reduce load on a computer, the data acquisition is constructed using a microcontroller LPC1768. It provides upto 512 kB on-chip flash programming memory and this processor runs at frequencies upto 100 MHz, thus enabling high speed. It is based on an ARM(Advanced Risc Machine) Cortex-M3 which is used in embedded applications. This microcontroller gives high integration level and low power consumption. Every pin can be configured as a general purpose input and output(GPIO) independently. By configuration we can change it to either input or output or as per the function requirement.

4. Connector Board

There are eight analog input channels, can be configured for various types of sensors by changing few jumpers. The number of channels can be increased in multiples of eight, since eight channels are used as per the user requirement.

V. OBSERVATION TABLE

We are measuring the strain on D and M Cantilever Beam, when different weights are applied. The readings are, one when coated with material and another without any coating. The observation made is as follows-

1. Without coating

Weight(gms)	Readings		
100	50	50	52
200	102	102	103
300	248	249	252

2. With coating

Weight(gms)	Readings		
100	50	50	52
200	102	101	103
300	248	247	247

VI. CONCLUSION

We have made the design such that, with the help of software configuration we can measure strain on any of the arm of the Wheatstone bridge. This gives us flexibility and there is no need for separate boards for measurement of different parameters and different configurations. The application of strain measurement is for automobile testing, medical and home applications and many more. On increasing the number of channels per board we are able to increase the number of parameters that can be measured. If more parameters measurement is demanded by the user we can similarly increase the number of data acquisition boards.

REFERENCES

[1] Cimbala, J. M., 2011, *Stress, strain and strain gauges*, Penn State University, USA.

[2] Jelena Manojlović, University of Niš, Faculty of Mechanical Engineering, Aleksandra Medvedeva 14, 18000 Niš, Serbia.

[3] Alexander Reyes and Francisco J. Valero,"Inexpensive, Wearable, Wireless, Multi-Channel, and Multi-Sensor Data Acquisition System" 978-1 4673-2767-1, 2013 IEEE.

[4] N. Mabunda and Meera K. Joseph- "The use of embedded DAS for electronic signal measurements" .Canadian Conference on Electrical and Computer Engineering (CCECE)-2016 IEEE.

[5] Patel Hiren and Patel Dipak ,"GUI Based Data Acquisition System using ARM Cortex M3 microcontroller", Patel Hiren et al- (IJCSIT) international Journal of Computer Science and Information Technlogies Vol. 3(1)-2012, 3199-3204.

[6] AlirezaAkhoondiAsadi, ShahriarBagheri, Ahmed Imam, Ehsan Jalayeri, WitoldKinsnert and NarimanSepehri, 978-1-5090-0996-1/16/ 2016 IEEE.

